=NOTE=

1. MATERIAL: STEEL, HOT DIP GALV. PER ASTM A153, LATEST REVISION.

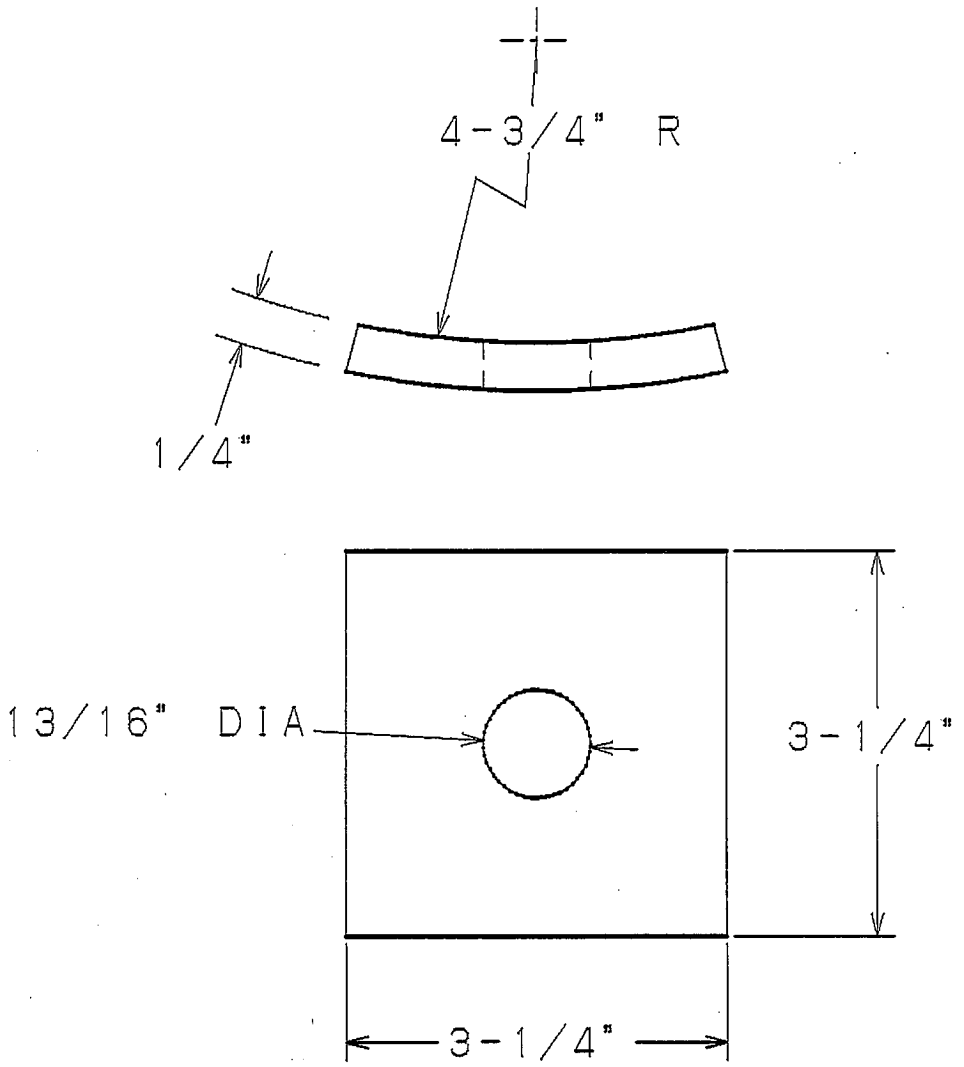

CAT. NO. 6825

LATEST EC NO:	REV.	DATE	CHANGED BY	RESP ENGINEER
91060702	-	--------	---	ODOM

DO NOT SCALE THIS DWG

THIRD ANGLE PROJECTION

ISO DUAL DIMENSIONS
IN=INCH. MM=MILLIMETER

DRN BY:	DATE	TITLE:	SIZE
JONES	06-18-91	CURVED WASHER	A

HUBBELL® POWER SYSTEMS CHANCE®

CAE CAD CAM

DWG NO: SA6825

CONFIDENTIAL: THIS DRAWING AND ITS CONTENTS ARE CONFIDENTIAL AND THE EXCLUSIVE PROPERTY OF HUBBELL / A.B. CHANCE COMPANY. NO PUBLICATION, DISTRIBUTION OR COPIES MAY BE MADE WITHOUT WRITTEN CONSENT BY HUBBELL / A.B. CHANCE COMPANY.
© 2000 HUBBELL/A.B. CHANCE. UNPUBLISHED - ALL RIGHTS RESERVED UNDER THE COPYRIGHT LAWS